Copyrights 2000-2012 TOTEN CO., V120210
Any company or person must not copy, record any information without written permission, otherwise, it will be indicted.
Please note latest product data, no additional notice if any update.
First printing in Feb. 2012

We reserver the right to further developmengts and technical modifications, along with errors and printing errata, shall not constitute grounds for compensation.

TOTEN
Cabinets
www. toten. com. cn

Agent/Distributor Welcome
OEM Welcome
ODM Welcome

TOTEN CO.
www.toten.com.cn
E-mail: sales @ toten.com.cn

Company address:
P.O.Box:N068
#1218,East Block,12th floor, Hanggang Fuchun Business Mansion, Shennan Zhong
Futian District, Shenzhen, China(Opposite of China Merchants Bank Bldg)
Tel: 86-755-88299553,88299559 Fax: 86-755-88299101

Factory address:
1. South of Tianliao Road, Gongming Street, Guangming New District, Shenzhen,China.
2. West of Gui 2nd Road, South of Ring Rd, Yushan Town, Kunshan, Jiang Su Pro

2012 INDUSTRY CONTROL PRODUCT CATALOGUE

TOTEN
Cabinets
www. toten. com. cn

Create Classic Project

Show Elegant Quality

Professional Cabinet Manufacturer

C 8 Control Enclosures Page 03-07
CC Control Enclosures Page 08-11
CB Compact Enclosures Page 12-18

Quality control equipments

TOTEN Cabinets
www.toten.com.cn

Plating thickness tester

Spray thickness tester

Colour difference tester

Insulation break down tester

IP grading testing equipment

Earth bonding tester

Flash tester

Salt spray tester

X-Ray Fluorescence Spectrometer for ROHS

Tru Laser 3030 classic

Hydraulic Turret Punch Presses

Welding robot

Spreading machine

Press Brakes

Dealing with sewage

HIGH-PERFORMANCE CABINET AND ENCLOSURE

Our company professionally dedicates to R&D, manufacturing cabinets and enclosures . We have 2 factories， 1 in Shenzhen and 1 in Kunshan City for the moment: covering 118,000 square meters with 12 assembling lines and 5 spraying painting lines. We have hundreds of equipment including Hydraulic Turret Punch Presses, Numerical Control Laser Incision Machines and Numerical Folding Equipment. We can also do electrophoresis priming for the purpose of special requirements of antisepsis. Our company is one of the biggest manufacturers in cabinet industry of China.

We run under ISO9001:2008 certification. We have past the strict tests, and acquired the certification of SGS for years. We manufacture high quality under a series of tests, tested by testing apparatus ,including UX-300 Energy X-ray Spectrum Instrument (RoHS testing instrument), Salt-fog Cauterization Testing Machine, Coat Thickness Testing Machine, Electronic Chromatism Machine and Marble Detection Flat-roof Machine.

Shenzhen Factory

REDUCING YOUR SHIPPING AND STORAGE COST

TOTEN is our registered brand.**TOTEN** products feature are stable, easy to be assembled, and with elegant appearance. Flat packing (patent) will help you to assemble the cabinet easily and reduce your cost by saving shipping cost and labor cost.

Our company dedicates to providing professional Server Cabinets, Network Cabinets, Wall-Mounted Cabinets, Outdoor Cabinets, Open Racks, Control Boxes and Control Enclosures. we have project engineers working in each factory, and also have more than 20 professional R&D and technique engineers working in head factory. OEM is welcome. We can do OEM according to customers' requirements, which can reduce your R&D cost and enhance your competitiveness. If you are interested in our products, please feel free to contact us for more information.

C8 Control Enclosures

TOTEN Cabinets
www.toten.com.cn

Feature:

- Knock down SPCC steel profile frame, flat pack could reduce package volume up to 70%;
- Save half cost of shipping and storage;
- Delivered by one single person available;
- Convenient to be installed in narrow space;
- Easily be assembled in 15 minutes;
- Stable structure, exquisite image, spacious inner mounting space, common used accessories;
- Strong and stable profiled bar with prepared mounting holes (integrated size: 25mm);
- Three point bolted luxury lock, side panels (optional) and back panels are fixed by screws.

Knock down SPCC steel profile frame, easy to be assembled

Degree of protection:

- Comply with IEC60529, EN60529/10.91 and GB4208-93 standard, IP55.

Material:

- SPCC cold rolled steel;
- Thickness: mounting panel: 2.5mm; front door: 2.0mm; frame: 1.5mm; Back panel:1.5mm; others: 1.2mm.

Surface finish:

- Body of enclosure, frame & doors:
  Degreasing, phosphoric, powder coated, static powered with textured stove enamel RAL7035;
- Mounting panel (SPCC cold rolled steel):
  Degreasing, pickling, phosphoric, powder coated, static powdered with flat coating RAL2000.

Use:

- Available for mounting various industrial components, controlling and cables entry.

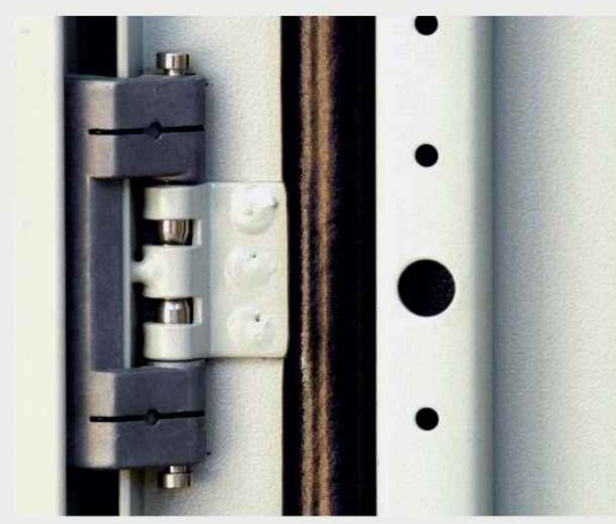

130° blind hinge

TOTEN Cabinets
www.toten.com.cn

Main structure

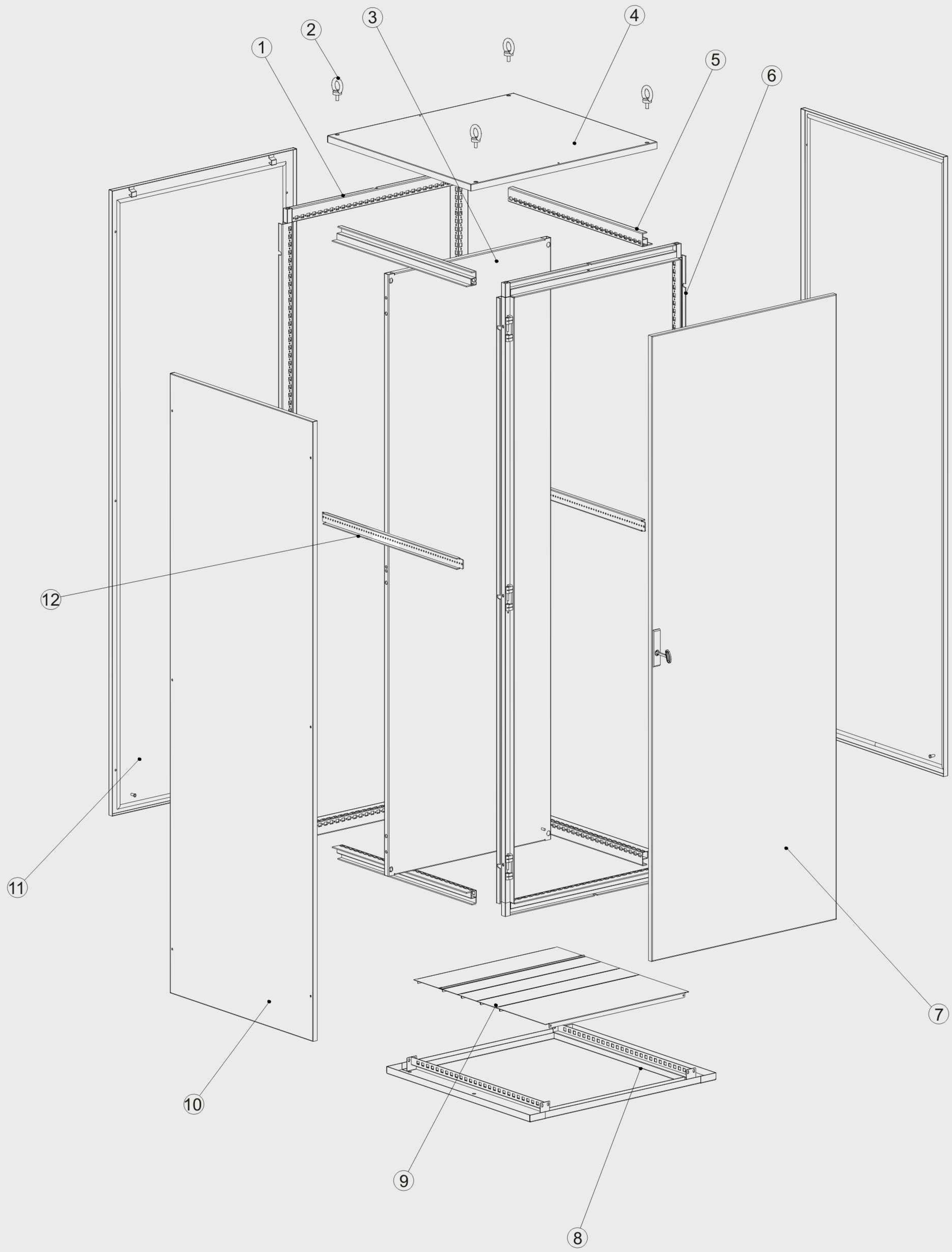

1.Rear frame 2.Eye bolts 3.Mounting panel 4.Top cover 5.Side frame 6.Front frame 7.Front door 8.Bottom panel
9.3-sectioned panel 10.Side panel (optional) 11.Back panel 12.Mounting angle

C8 Control Enclosures

TOTEN Cabinets
www.toten.com.cn

Main dimension

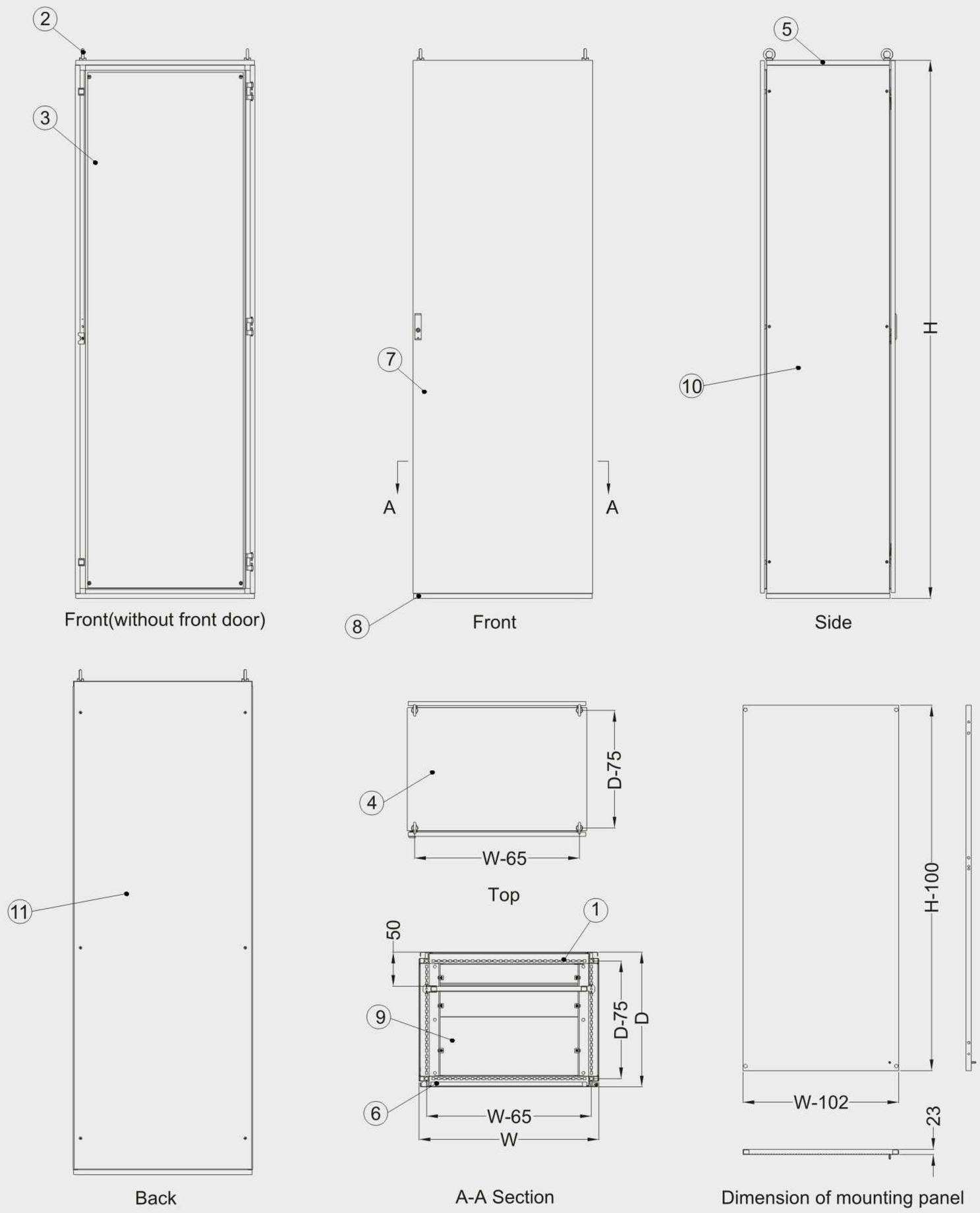

Main parts：

S/N	Specification	Quantity	Unit	Material	Surface Finish	Remark
1	Rear frame	1	Piece	SPCC cold rolled steel t1.5	Powder coated	---
2	Eye bolt	4	Piece	Steel	Color Zinc	---
3	Mounting panel	1	Piece	SPCC cold rolled steel t2.5	Powder coated	---
4	Top cover	1	Piece	SPCC cold rolled steel t1.2	Nickel coated	---
5	Side frame	4	Piece	SPCC cold rolled steel t1.5	Powder coated	---
6	Front frame	1	Piece	SPCC cold rolled steel t1.5	Powder coated	---
7	Front door①	1	Piece	SPCC cold rolled steel t2.0	Powder coated	Single-section front door
8	Bottom panel	1	Piece	SPCC cold rolled steel t1.2	Powder coated	---
9	3-sectioned bottom panel	1	Set	SPCC cold rolled steel t1.2	Powder coated	---
10	Side panel (optional)	2	Piece	SPCC cold rolled steel t1.2	Powder coated	
11	Back panel	1	Piece	SPCC cold rolled steel t1.5	Powder coated	
12	Mounting angle	2	Piece	SPCC cold rolled steel t2.0	Powder coated	---

Remarks: ① Width over 1000MM enclosures is with double-section front door.

C8 Control Enclosures

TOTEN Cabinets
www.toten.com.cn

Specification:

Model No.	Width (mm)	Depth (mm)	Height (mm)	Packing Dimension	Volume (CBM)
C8.6418.9■00	600	400	1800	535*100*1850+535*150*1850+620*420*80	0.2683
C8·6420·9■00			2000	535*100*2050+535*150*2050+620*420*80	0.2950
C8·6422·9■00			2200	535*100*2250+535*150*2250+620*420*80	0.3218
C8·8418·9■00	800	400	1800	735*100*1850+735*150*1850+820*420*80	0.3675
C8·8420·9■00			2000	735*100*2050+735*150*2050+820*420*80	0.4042
C8·8422·9■00			2200	735*100*2250+735*150*2250+820*420*80	0.4410
C8·0418·9■00	1000	400	1800	935*100*1850+935*150*1850+1020*420*80	0.4667
C8·0420·9■00			2000	935*100*2050+935*150*2050+1020*420*80	0.5135
C8.0422.9■00			2200	935*100*2250+935*150*2250+1020*420*80	0.5602
C8·2418·9■00	1200	400	1800	1135*100*1850+1135*150*1850+1220*420*80	0.5659
C8·2420·9■00			2000	1135*100*2050+1135*150*2050+1220*420*80	0.6227
C8·2422·9■00			2200	1135*100*2250+1135*150*2250+1220*420*80	0.6794
C8·6518·9■00	600	500	1800	535*100*1850+535*150*1850+620*520*80	0.2732
C8.6520.9■00			2000	535*100*2050+535*150*2050+620*520*80	0.3000
C8·6522·9■00			2200	535*100*2250+535*150*2250+620*520*80	0.3267
C8·8518·9■00	800	500	1800	735*100*1850+735*150*1850+820*520*80	0.3740
C8·8520·9■00			2000	735*100*2050+735*150*2050+820*520*80	0.4108
C8·8522·9■00			2200	735*100*2250+735*150*2250+820*520*80	0.4475
C8·0518·9■00	1000	500	1800	935*100*1850+935*150*1850+1020*520*80	0.4749
C8·0520·9■00			2000	935*100*2050+935*150*2050+1020*520*80	0.5216
C8·0522·9■00			2200	935*100*2250+935*150*2250+1020*520*80	0.5684
C8·2518·9■00	1200	500	1800	1135*100*1850+1135*150*1850+1220*520*80	0.5757
C8·2520·9■00			2000	1135*100*2050+1135*150*2050+1220*520*80	0.6324
C8·2522·9■00			2200	1135*100*2250+1135*150*2250+1220*520*80	0.6892
C8·6618·9■00	600	600	1800	535*100*1850+535*150*1850+620*620*80	0.2782
C8·6620·9■00			2000	535*100*2050+535*150*2050+620*620*80	0.3049
C8·6622·9■00			2200	535*100*2250+535*150*2250+620*620*80	0.3317
C8.8618.9■00	800	600	1800	735*100*1850+735*150*1850+820*620*80	0.3806
C8·8620·9■00			2000	735*100*2050+735*150*2050+820*620*80	0.4174
C8·8622·9■00			2200	735*100*2250+735*150*2250+820*620*80	0.4541
C8·0618 9■00	1000	600	1800	935*100*1850+935*150*1850+1020*620*80	0.4830
C8·0620·9■00			2000	935*100*2050+935*150*2050+1020*620*80	0.5298
C8·0622·9■00			2200	935*100*2250+935*150*2250+1020*620*80	0.5765
C8·2618·9■00	1200	600	1800	1135*100*1850+1135*150*1850+1220*620*80	0.5854
C8·2620·9■00			2000	1135*100*2050+1135*150*2050+1220*620*80	0.6422
C8·2622·9■00			2200	1135*100*2250+1135*150*2250+1220*620*80	0.6989
C8·6818·9■00	600	800	1800	535*100*1850+535*150*1850+620*820*80	0.2881
C8.6820.9■00			2000	535*100*2050+535*150*2050+620*820*80	0.3149
C8·6822·9■00			2200	535*100*2250+535*150*2250+620*820*80	0.3416
C8.8818.9■00	800	800	1800	735*100*1850+735*150*1850+820*820*80	0.3937
C8·8820·9■00			2000	735*100*2050+735*150*2050+820*820*80	0.4305
C8·8822·9■00			2200	735*100*2250+735*150*2250+820*820*80	0.4672
C8.0818.9■00	1000	800	1800	935*100*1850+935*150*1850+1020*820*80	0.4993
C8·0820· 9■00			2000	935*100*2050+935*150*2050+1020*820*80	0.5461
C8·0822· 9■00			2200	935*100*2250+935*150*2250+1020*820*80	0.5928
C8·2818· 9■00	1200	800	1800	1135*100*1850+1135*150*1850+1220*820*80	0.6050
C8·2820· 9■00			2000	1135*100*2050+1135*150*2050+1220*820*80	0.6617
C8·2822· 9■00			2200	1135*100*2250+1135*150*2250+1220*820*80	0.7185

Definition of color:

Model No.	Feature of mounting plate
C8.■■■■. ■0■■	Mounting panel: RAL2000, others: RAL7035
C8.■■■■. ■1■■	Mounting panel: Zinc, others: RAL7035

Color：

RAL7035	RAL2000
gray	orange

TOTEN Cabinets
www.toten.com.cn

Reducing your shipping and storage cost

Assembling Draft:

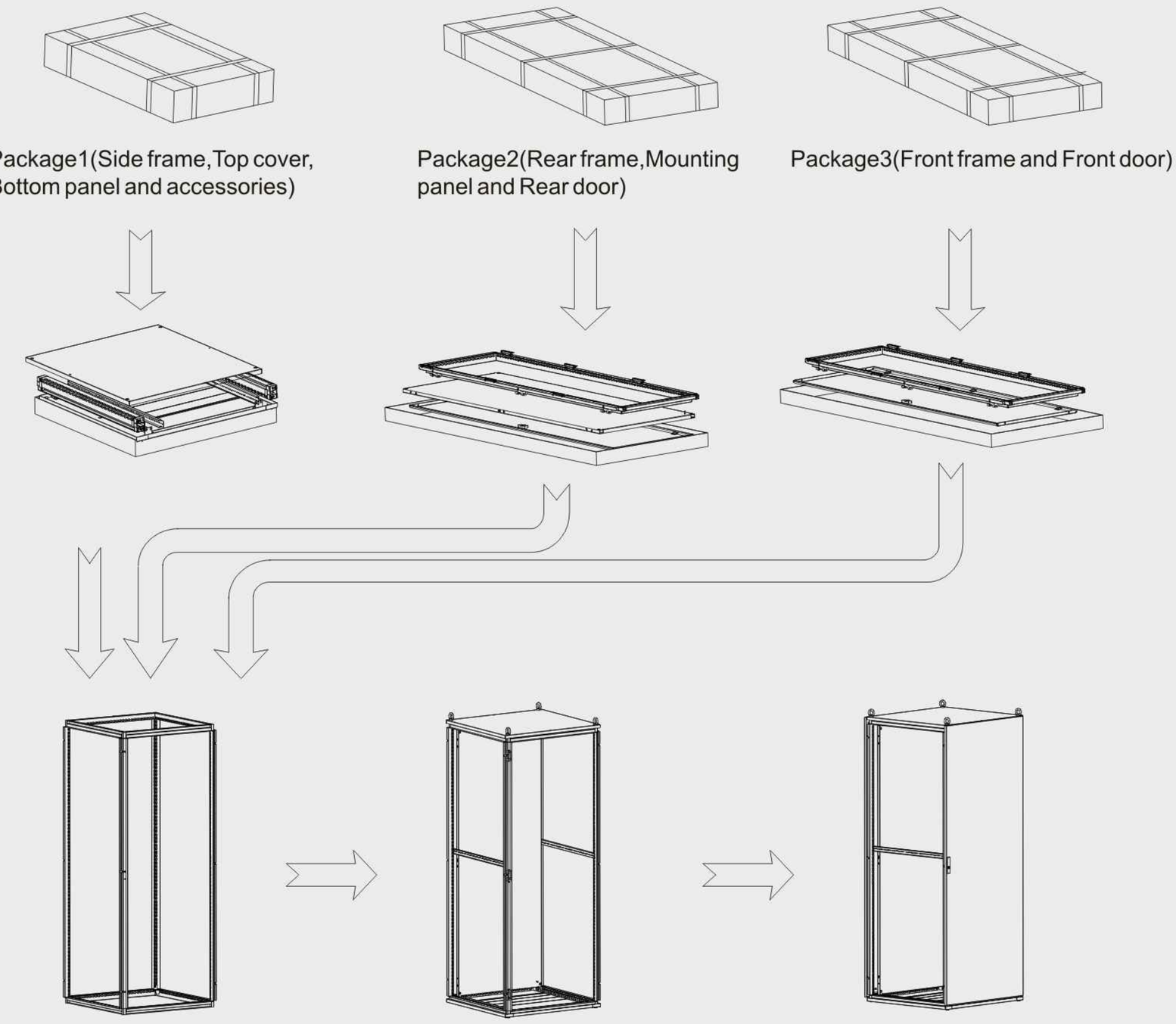

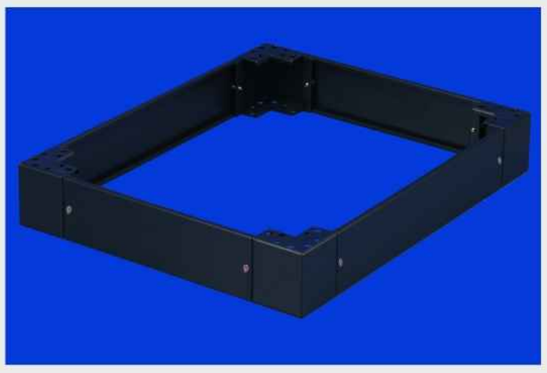

CC plinth

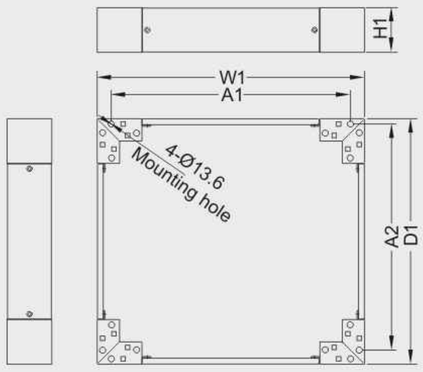

Dimension

CC plinth

Material:

- SPCC cold rolled steel，Thickness: Plate 1.5MM, others 2.5MM.

Surface Finish:

- Degreasing、phosphoric、powder coated.

Color:

- RAL9004 RAL7035

Specification：

Definition of color: SA.■■■■. ■■01:RAL9004 SA.■■■■. ■■00:RAL7035

Model No.	Specification	Dimension(MM)					Use
		W1	D1	H1	A1	A2	
SA.1064.10■■	64 CC Plinth(100mm height)	598	349	100	535	325	600-width and 400-depth CC/C8 cabinets
SA.1065.10■■	65 CC Plinth(100mm height)	598	449	100	535	425	600-width and 500-depth CC/C8 cabinets
SA.1066.10■■	66 CC Plinth(100mm height)	598	549	100	535	525	600-width and 600-depth CC/C8 cabinets
SA.1084.10■■	84 CC Plinth(100mm height)	798	349	100	735	325	800-width and 400-depth CC/C8 cabinets
SA.1085.10■■	85 CC Plinth(100mm height)	798	449	100	735	425	800-width and 500-depth CC/C8 cabinets
SA.1086.10■■	86 CC Plinth(100mm height)	798	549	100	735	525	800-width and 600-depth CC/C8 cabinets
SA.1004.10■■	04 CC Plinth(100mm height)	998	349	100	935	325	1000-width and 400-depth CC/C8 cabinets
SA.1006.10■■	06 CC Plinth(100mm height)	998	549	100	935	525	1000-width and 600-depth CC/C8 cabinets
SA.1084.20■■	84 CC Plinth(200mm height)	798	349	200	735	325	800-width and 400-depth CC/C8 cabinets
SA.1085.20■■	85 CC Plinth(200mm height)	798	449	200	735	425	800-width and 500-depth CC/C8 cabinets
SA.1086.20■■	86 CC Plinth(200mm height)	798	549	200	735	525	800-width and 600-depth CC/C8 cabinets

CC Control Enclosures

TOTEN Cabinets
www.toten.com.cn

Feature:

- Strong and stable profiled bar with prepared mounting holes (integrated size: 25mm);
- Stable structure, exquisite image, spacious inner mounting space, common used accessories;
- Three point bolted luxury lock, side panels (optional) and back panels are fixed by screws;
- Door can be open to 130 degrees, open left or right freely;
- All-round Polyurethane Gasket between door and Frame with good sealing performance;
- 3-sectioned bottom panel, easy to enter cables;
- M8 earthling pole mounted on the body, door and the mounting panel;
- A whole mounting panel, can be adjusted.

Degree of protection:

- Comply with IEC60529, EN60529/10.91 and GB4208-93 standard, IP55.

Material:

- SPCC cold rolled steel;
- Thickness: mounting panel: 2.5mm, front door: 2.0mm; frame: 1.5mm; Back panel:1.5mm; others: 1.2mm.

Surface finish:

- Body of enclosure, frame & doors:
  Degreasing, phosphoric, powder coated, static powered with textured stove enamel RAL7035;
- Mounting panel (SPCC cold rolled steel):
  Degreasing, pickling, phosphoric, powder coated, static powdered with flat coating RAL2000.

Use:

- Available for mounting various industrial components, controlling and cables entry.

Polyurethane Gasket & Earthing kit

3-sectioned bottom panel

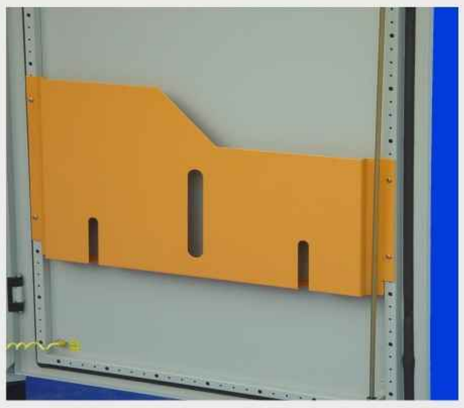

Data pocket (optional)

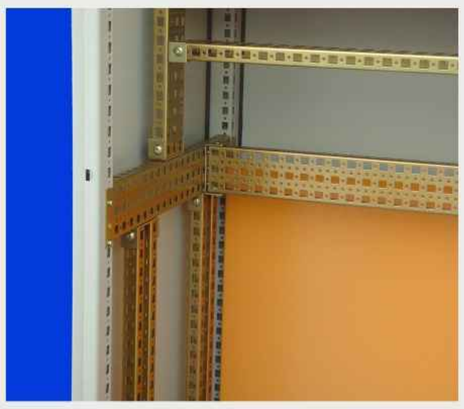

Various horizontal Mounting angles (optional)

TOTEN Cabinets
www.toten.com.cn

Main structure

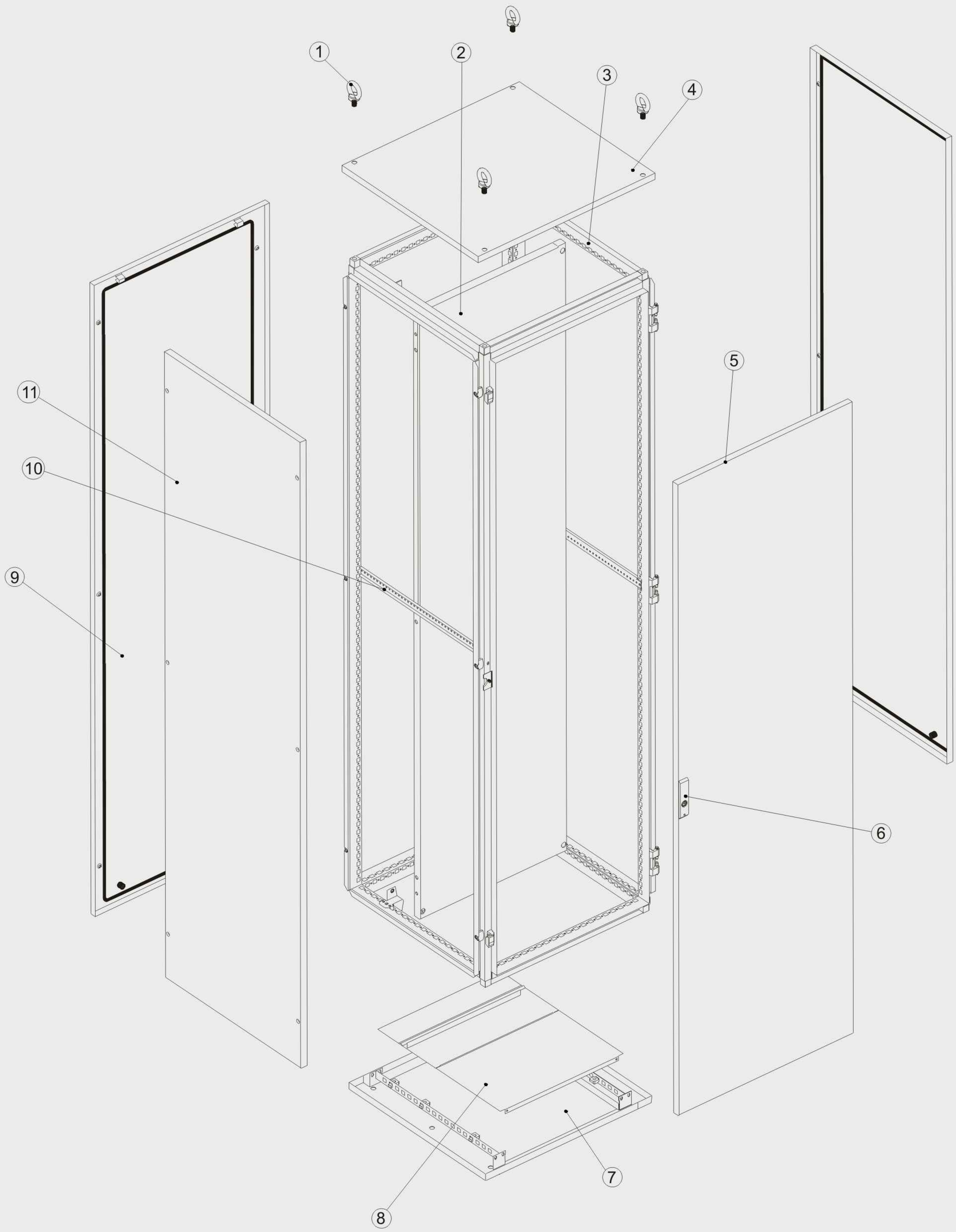

1. Eye bolts
2. Mounting panel
3. Frame
4. Top cover
5. Front door
6. Lock
7. Bottom panel
8. 3-sectioned panel
9. Back panel
10. Mounting angle
11. Side panel (optional)

TOTEN Cabinets
www.toten.com.cn

Main dimension

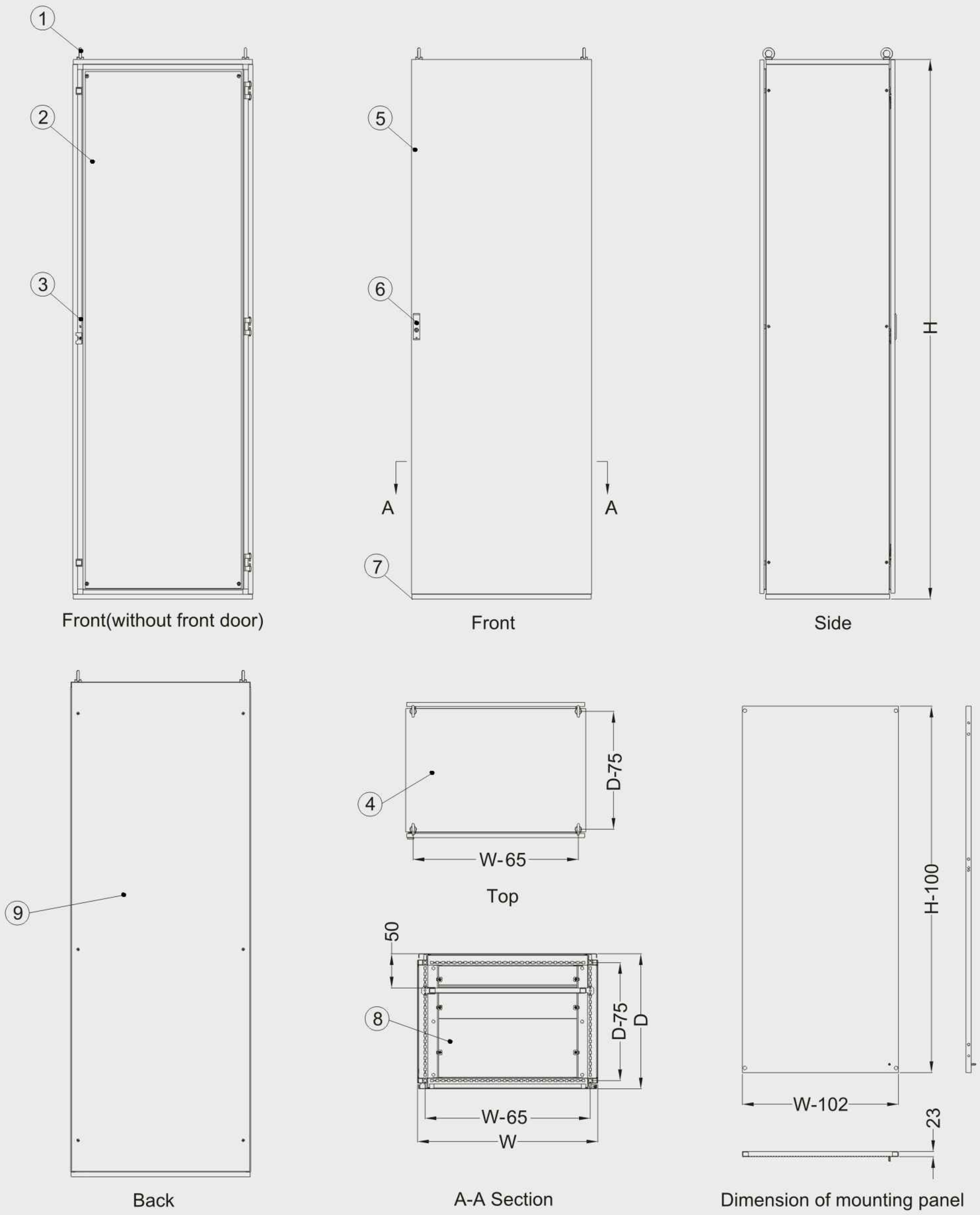

Front(without front door) | Front | Side

Back | Top | A-A Section | Dimension of mounting panel

Main parts:

S/N	Specification	Quantity	Unit	Material	Surface Finish	Remark
1	Eye bolt	4	Piece	Steel	Color Zinc	---
2	Mounting panel	1	Piece	SPCC cold rolled steel t2.5	Powder coated	---
3	Frame	1	Set	SPCC cold rolled steel t1.5	Powder coated	---
4	Top cover	1	Piece	SPCC cold rolled steel t1.2	Nickel coated	---
5	Front door①	1	Piece	SPCC cold rolled steel t2.0	Powder coated	Single-section front door
6	Lock	1	Piece	---	---	With 1 key
7	Bottom panel	1	Piece	SPCC cold rolled steel t1.2	Powder coated	---
8	3-sectioned bottom panel	1	Set	SPCC cold rolled steel t1.2	Powder coated	---
9	Back panel	1	Piece	SPCC cold rolled steel t1.5	Powder coated	---
10	Mounting angle	2	Piece	SPCC cold rolled steel t2.0	Powder coated	---

Remarks: ① Width over 1000MM enclosures is with double-section front door.

CC Control enclosures

TOTEN Cabinets
www.toten.com.cn

Specification:

Model No.	Width (mm)	Depth (mm)	Height (mm)	Packing Dimension	Volume (CBM)
CC.6418.9■00	600	400	1800	670*470*1830	0.5763
CC.6420.9■00			2000	670*470*2030	0.6392
CC.6422.9■00			2200	670*470*2230	0.7022
CC.8418.9■00	800	400	1800	870*470*1830	0.7483
CC.8420.9■00			2000	870*470*2030	0.8301
CC.8422.9■00			2200	870*470*2230	0.9118
CC.0418.9■00	1000	400	1800	1070*470*1830	0.9203
CC.0420.9■00			2000	1070*470*2030	1.0209
CC.0422.9■00			2200	1070*470*2230	1.1215
CC.2418.9■00	1200	400	1800	1270*470*1830	1.0923
CC.2420.9■00			2000	1270*470*2030	1.2117
CC.2422.9■00			2200	1270*470*2230	1.3311
CC.6518.9■00	600	500	1800	670*570*1830	0.6989
CC.6520.9■00			2000	670*570*2030	0.7753
CC.6522.9■00			2200	670*570*2230	0.8516
CC.8518.9■00	800	500	1800	870*570*1830	0.9075
CC.8520.9■00			2000	870*570*2030	1.0067
CC.8522.9■00			2200	870*570*2230	1.1059
CC.0518.9■00	1000	500	1800	1070*570*1830	1.1161
CC.0520.9■00			2000	1070*570*2030	1.2381
CC.0522.9■00			2200	1070*570*2230	1.3601
CC.2518.9■00	1200	500	1800	1270*570*1830	1.3247
CC.2520.9■00			2000	1270*570*2030	1.4695
CC.2522.9■00			2200	1270*570*2230	1.6143
CC.6618.9■00	600	600	1800	670*670*1830	0.8215
CC.6620.9■00			2000	670*670*2030	0.9113
CC.6622.9■00			2200	670*670*2230	1.0010
CC.8618.9■00	800	600	1800	870*670*1830	1.0667
CC.8620.9■00			2000	870*670*2030	1.1833
CC.8622.9■00			2200	870*670*2230	1.2999
CC.0618 9■00	1000	600	1800	1070*670*1830	1.3119
CC.0620.9■00			2000	1070*670*2030	1.4553
CC.0622.9■00			2200	1070*670*2230	1.5987
CC.2618.9■00	1200	600	1800	1270*670*1830	1.5571
CC.2620.9■00			2000	1270*670*2030	1.7273
CC.2622.9■00			2200	1270*670*2230	1.8975
CC.6818.9■00	600	800	1800	670*870*1830	1.0667
CC.6820.9■00			2000	670*870*2030	1.1833
CC.6822.9■00			2200	670*870*2230	1.2999
CC.8818.9■00	800	800	1800	870*870*1830	1.3851
CC.8820.9■00			2000	870*870*2030	1.5365
CC.8822.9■00			2200	870*870*2230	1.6879
CC.0818.9■00	1000	800	1800	1070*870*1830	1.7035
CC.0820. 9■00			2000	1070*870*2030	1.8897
CC.0822. 9■00			2200	1070*870*2230	2.0759
CC.2818. 9■00	1200	800	1800	1270*870*1830	2.0220
CC.2820. 9■00			2000	1270*870*2030	2.2429
CC.2822. 9■00			2200	1270*870*2230	2.4639

Definition of color:

Model No.	Feature of mounting plate
CC.■■■■. ■0■■	Mounting panel: RAL2000, others: RAL7035
CC.■■■■. ■1■■	Mounting panel: Zinc, others: RAL7035

Color:

RAL7035	RAL2000
gray	orange

CB Compact Enclosures

TOTEN Cabinets
www.toten.com.cn

Feature:

- Multi-folded periphery of the enclosure to avoid water and sundries entering into the inner enclosure;
- Cold rolled steel welded frame with strong structure;
- All-round polyurethane gasket in the door with good protection;
- Molded door border with exquisite image and strong intensity;
- Door can be open from left or right;
- Door can be turned to 110 degrees with hinge, and 180 degrees with special hinge;
- Adjustable mounting panel;
- M8 earth pole is mounted on the body, door and the mounting panel;
- Mounting hole drilled at the back of the enclosure, no need extra holes .

Multi-folded protection

Adjustable mounting panel

Degree of protection:

- Comply with IEC60529, EN60529/10.91 and GB4208-93 standard:
- Small size enclosure with IP66 (width and height less than 400mm);
- Width and height over 400mm enclosure with IP55;

Material:

- SPCC cold rolled steel;
- Thickness: mounting panel: 2.5MM; others: 1.5mm;

Surface finish:

- Body of enclosure and doors ;
  Degreasing, phosphoric, electrophoretic dip-coated printed, static power with textured stove enamel RAL7035;
- Mounting panel (SPCC cold rolled steel)
  Degreasing, pickling, phosphoric, electrophoretic dip-coated printed, static powdered with flat coating RAL2000.

Use:

- Available for mounting various kinds of electronic component, controlling and cable entry.

Molded door border

Powdered surface with textured stove enamel

TOTEN Cabinets
www.toten.com.cn

Main Structure

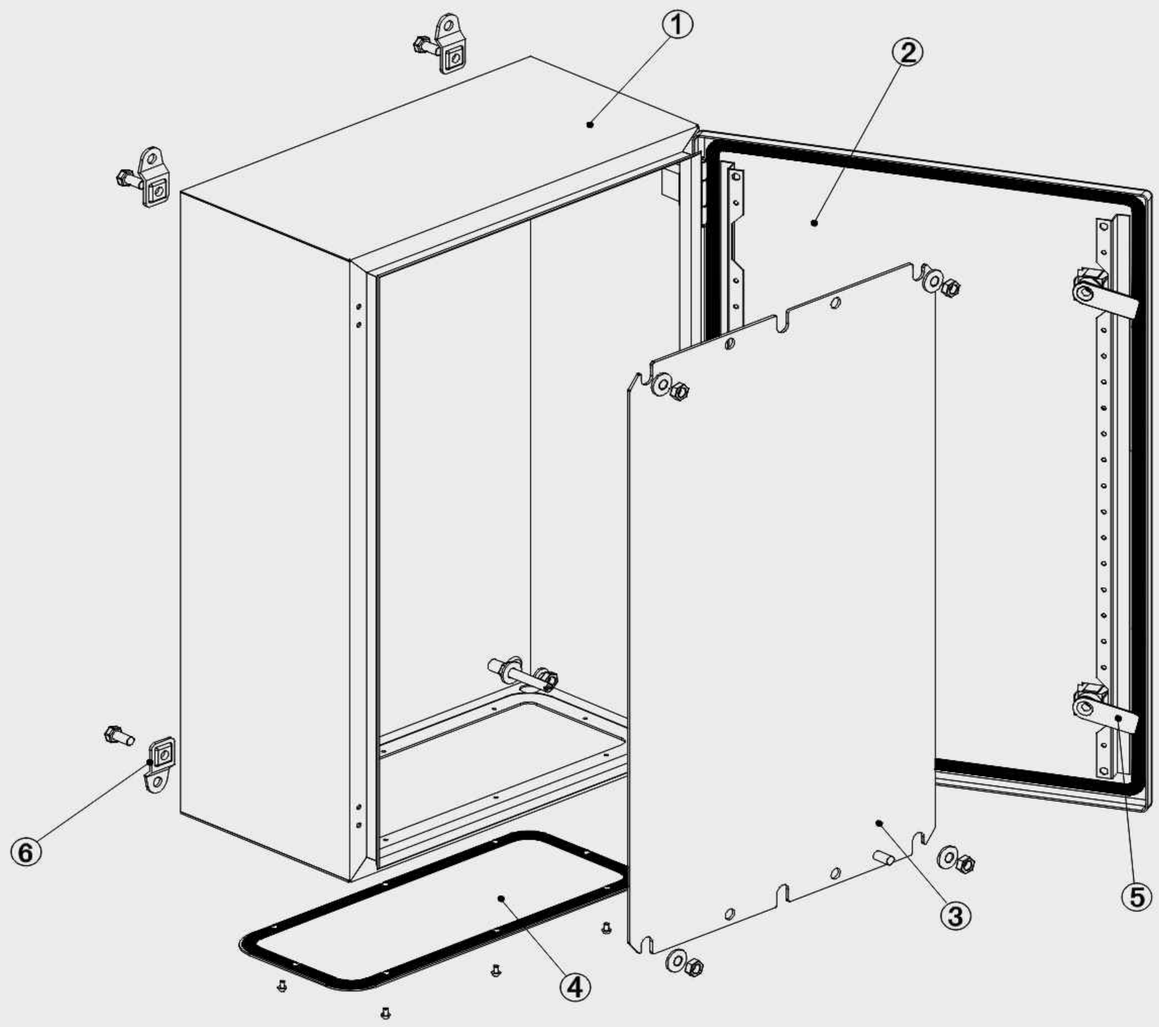

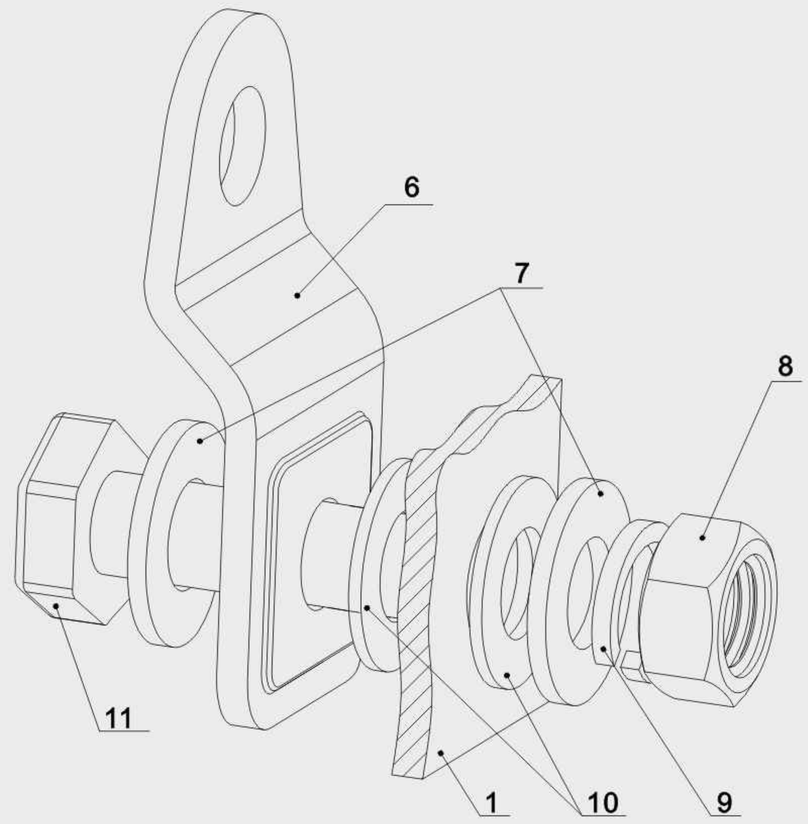

Drawing of installation instruction for wall bracket

1.Body 2.Door 3.Mounting panel 4.Mounting entrance panel 5.Lock 6.Braket 7.∅8 Flat cushion 8.M8 Nut 9. ∅8 spring cushion 10.Plastic cushion 11.M8∗20 Screw

Main Dimension

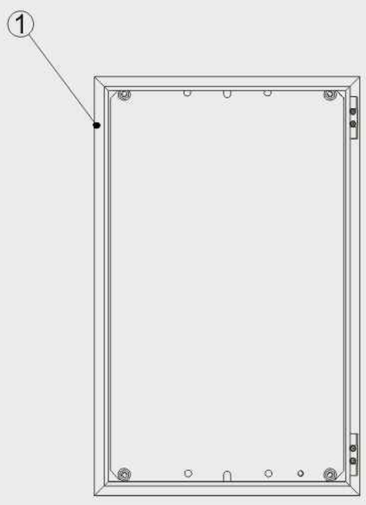

Front(without front door)

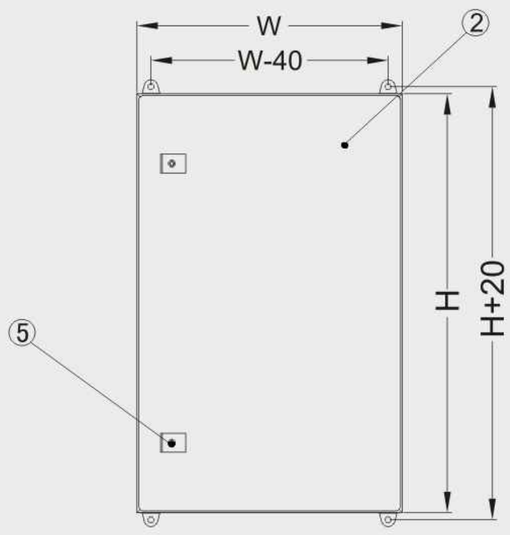

Front

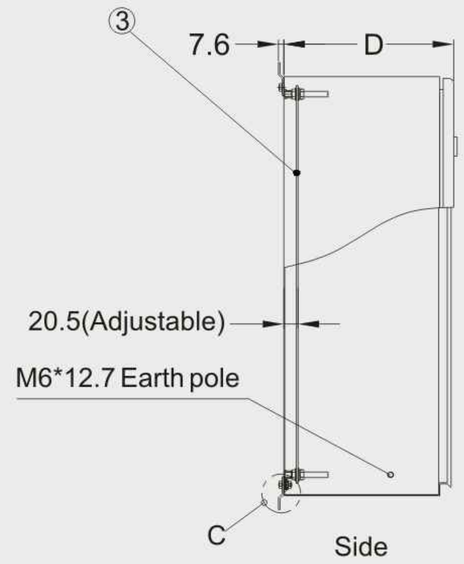

Side

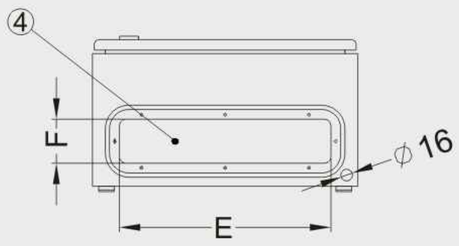

Bottom(without cover)

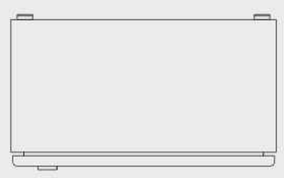

Top

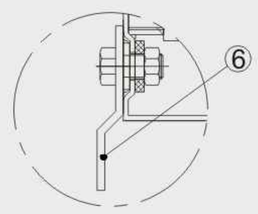

Enlarge part C

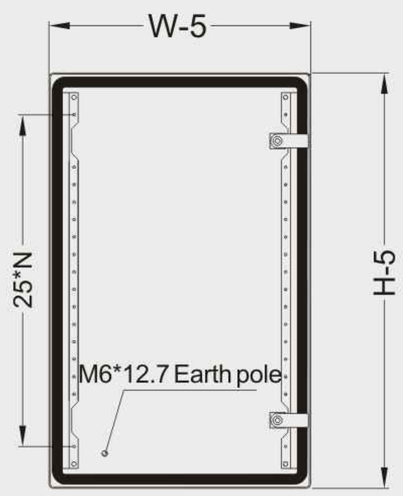

Inside of door

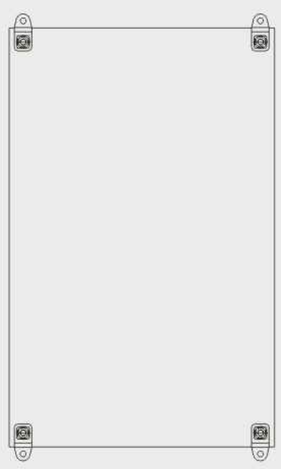

Back

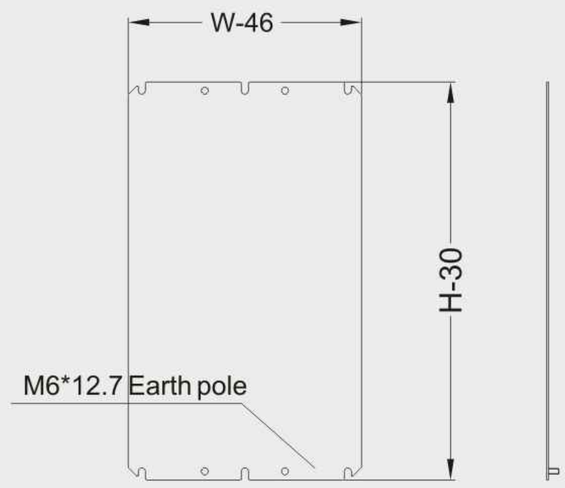

Mounting panel

CB Compact Enclosures

TOTEN Cabinets
www.toten.com.cn

Main parts：

S/N	Specification	Quantity	Unit	Material	Surface finish	Remark
1	Body	1	Piece	SPCC cold rolled steel t1.5	Powder coated	---
2	Door	1	Piece	SPCC cold rolled steel t1.5	Powder coated	---
3	Mounting Panel	1	Piece	SPCC cold rolled steel t2.5	Powder coated	---
4	Cable entry panel	1	Piece	SPCC cold rolled steel t1.5	Powder coated	---
5	Lock	2	Piece	SPCC cold rolled steel t2.5	Color Zinc	With 1 key
6	Bracket	4	Piece	---	---	---
7	Screw	4	Piece	Steel	Color Zinc	M8*16 for mounting
8	Nut	4	Piece	Steel	Color Zinc	M8 for mounting
9	Washer	4	Piece	Steel	Color Zinc	ø8 for mounting
10	Plastic washer	4	Piece	---	---	ø8 for mounting
11	Mounting hole cover	4	Piece	---	---	Closing the hole

Specification 1：

Model No.	Width (mm)	Height (mm)	Depth (mm)	Hole size(E*F) (mm)	Packing Dimension	Volume (CBM)
CB.2020.12■■	200	200	120	133*43	230*230*150	0.0079
CB.2025.15■■	200	250	150	133*43	230*280*180	0.0116
CB.2530.15■■	250	300	150	133*43	280*330*180	0.0166
CB.2530.20■■	250	300	200	133*43	280*330*230	0.0213
CB.3020.20■■	300	200	200	233*45	330*230*230	0.0175
CB.3040.25■■	300	400	250	233*45	330*430*280	0.0397
CB.3060.30■■	300	600	300	233*45	330*630*330	0.0686
CB.4020.15■■	400	200	150	303*63	430*230*180	0.0178
CB.4050.20■■	400	500	200	303*63	430*530*230	0.0524
CB.4060.30■■	400	600	300	303*113	430*630*330	0.0894
CB.5070.30■■	500	700	300	303*113	530*730*330	0.1277
CB.5080.40■■	500	800	400	303*113	530*830*430	0.1892
CB.6060.40■■	600	600	400	500*113	630*630*430	0.1707
CB.6010.50■■	600	1000	500	500*113	630*1030*530	0.3439
CB.7050.25■■	700	500	250	500*113	730*530*280	0.1083
CB.7050.30■■	700	500	300	500*113	730*530*330	0.1277
CB.8060.30■■	800	600	300	500*113	830*630*330	0.1726
CB.8010.40■■	800	1000	400	500*113	830*1030*430	0.3676
CB.1012.60■■	1000	1200	600	500*113	1030*1230*630	0.7981
CB.1014.60■■	1000	1400	600	500*113	1030*1430*630	0.9279
CB.1216.60■■	1200	1600	600	500*113	1230*1630*630	1.2631
CB.1218.60■■	1200	1800	600	500*113	1230*1830*630	1.4181

CB Compact Enclosures coding rules：

CB.■■■■. ■■■■

- Color
- Doors
- Depth
- Height
- Width

Door type:

Model No.	Door feature
CB.■■■■. ■■1■	Front door
CB.■■■■. ■■2■	Double-section front door

Width	200、250、300、400、500、600、700、800、1000、1200
Height	200、250、300、400、500、600、700、800、1000、1200、1400、1600、1800
Depth	120、150、200、250、300、400、500、600

Customers can choose each(Width、Height &Depth) of the demension in the table to makeit a CB Compact Enclosure according to their different needs.

Definition of color:

Model No.	Color featrue
CB.■■■■. ■0■■	Mounting panel: RAL2000, others: RAL7035
CB.■■■■. ■1■■	Mounting panel: Zinc, others: RAL7035

Color：

RAL7035	RAL2000
gray	orange

CB Compact Enclosures (With Optional Inner Door Version)

TOTEN Cabinets
www.toten.com.cn

Feature:

- Height adjustable inner door;
- Devices could be installed in the inner door according to customer's requirement,which could make good use of the space.

Degree of protection:

- Comply with IEC60529, EN60529/10.91 and GB4208-93 standard:
- Small size enclosure with IP66 (width and height less than 400mm);
- Width and height over 400mm enclosure with IP55;

Material:

- SPCC cold rolled steel;
- Thickness: mounting panel: 2.5mm; inner door 1.2mm; others: 1.5mm;

Surface finish:

- Body of enclosure and doors;
  Degreasing, phosphoric, electrophoretic dip-coated printed, static power with textured stove enamel RAL7035;
- Mounting panel (SPCC cold rolled steel)
  Degreasing, pickling, phosphoric, electrophoretic dip-coated printed, static powdered with flat coating RAL2000.

Grounding stud on inner door

Adjustable inner door

Main Structure

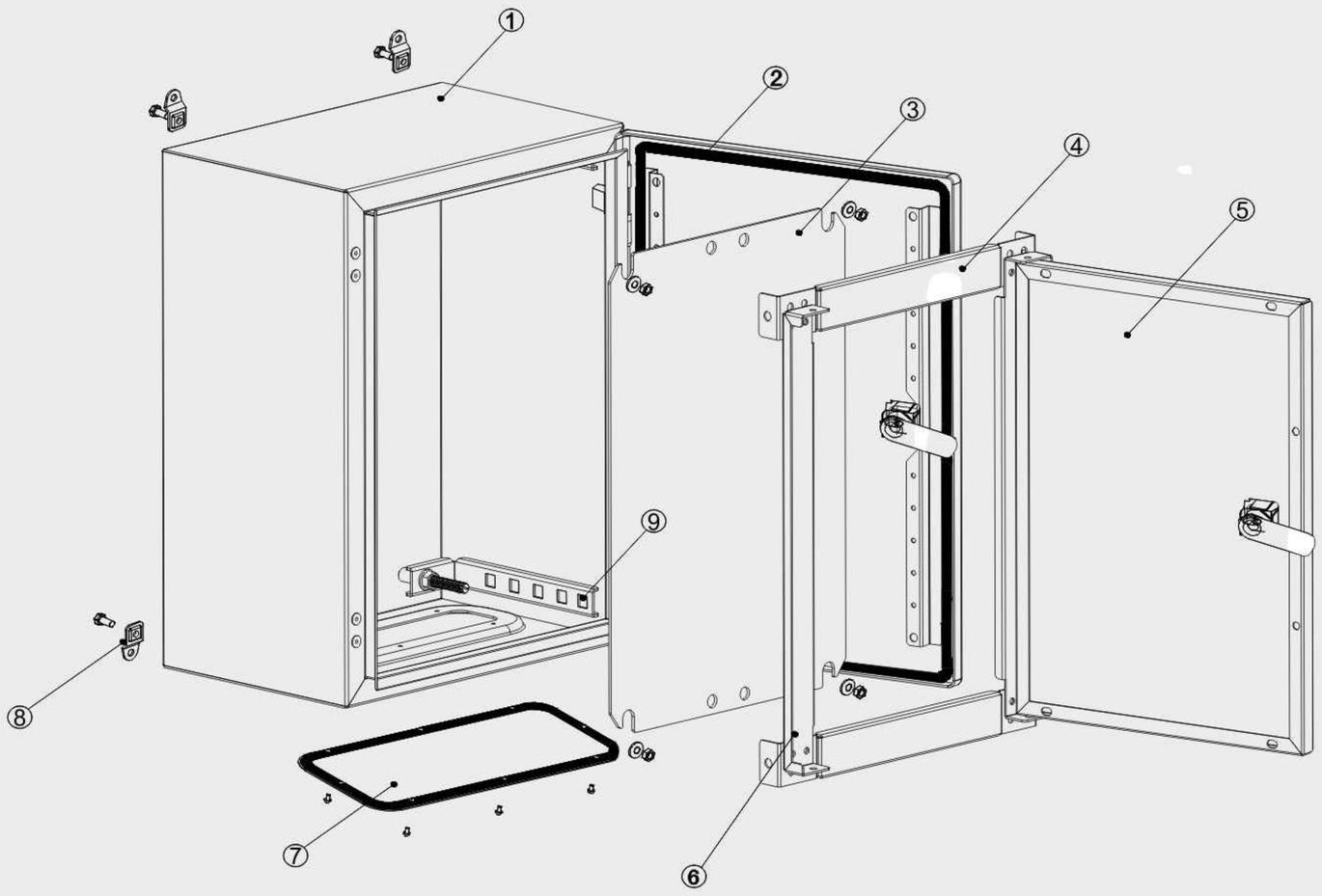

1.Body
2.Front door
3.Mounting panel
4.Horizontal beam
5.Inner door
6. Door border
7.Mounting entrance panel
8.Braket
9.Support bracket

CB Compact Enclosures (With Optional Inner Door Version)

TOTEN Cabinets
www.toten.com.cn

Main Dimension

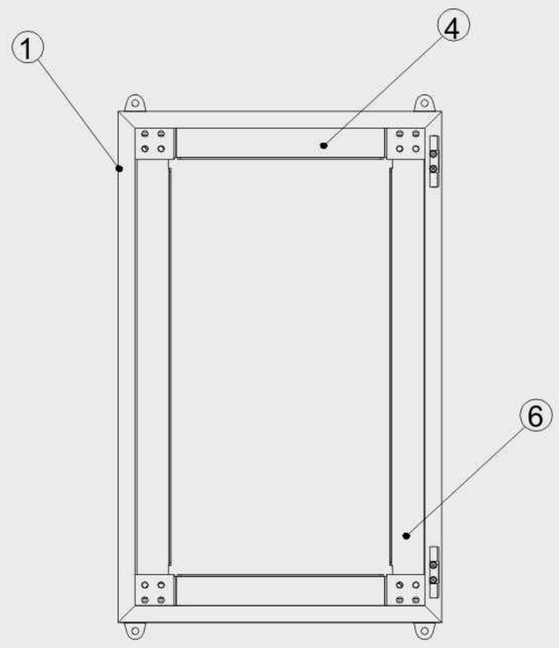

Front(without door)

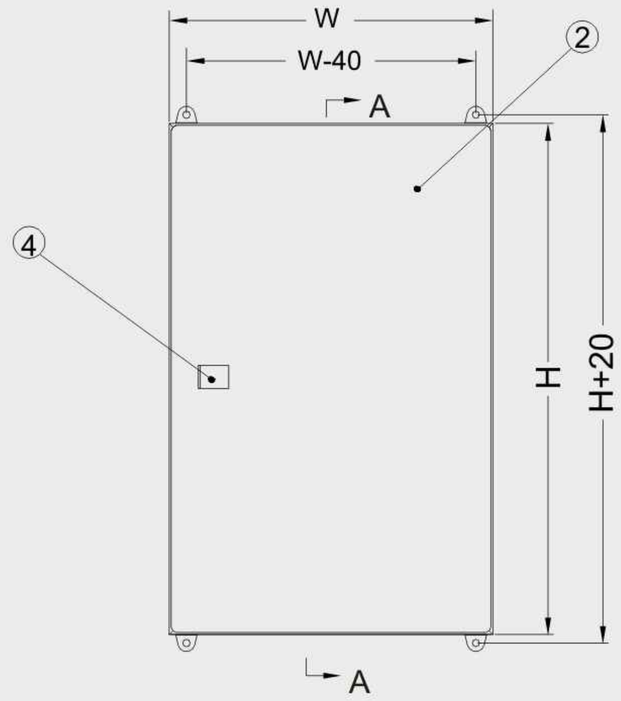

Front

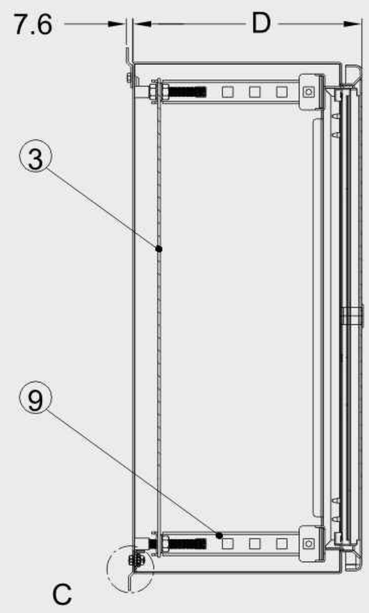

A-A

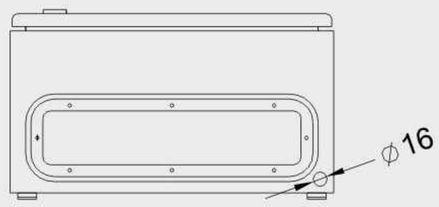

Bottom(without cover)

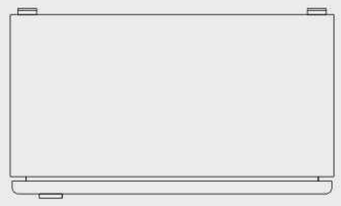

Top

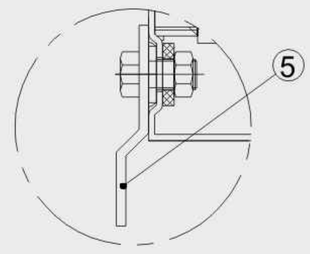

Enlarge part C

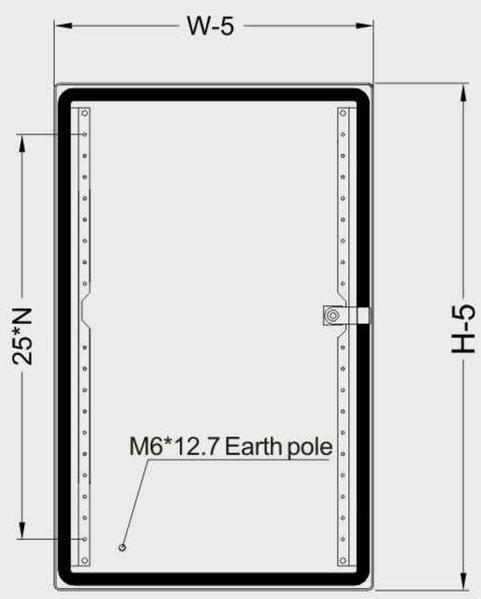

Inside of front door

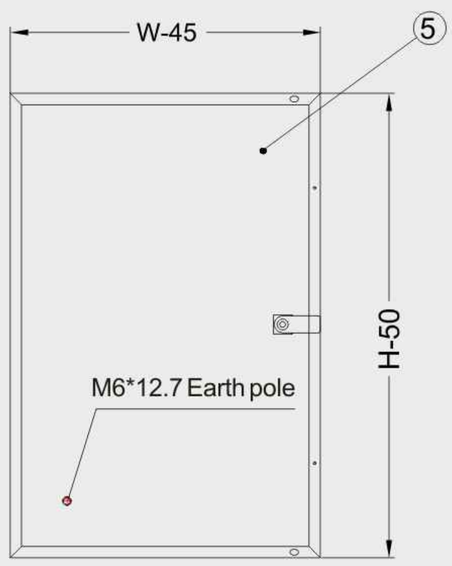

Inner door

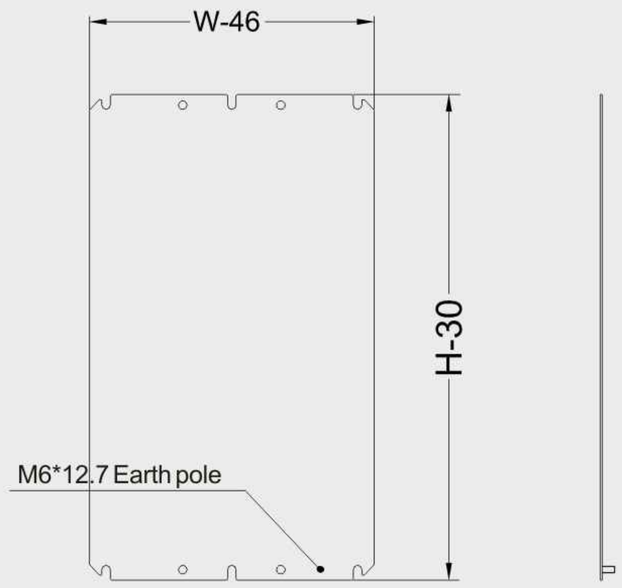

Mounting panel

Main parts:

S/N	Specification	Quantity	Unit	Material	Surface finish	Remark
1	Body	1	Piece	SPCC cold rolled steel t1.5	Powder coated	---
2	Front door	1	Piece	SPCC cold rolled steel t1.5	Powder coated	---
3	Mounting Panel	1	Piece	SPCC cold rolled steel t2.5	Powder coated	---
4	Horizontal beam	2	Piece	SPCC cold rolled steel t1.5	Powder coated	---
5	Inner door	1	Piece	SPCC cold rolled steel t1.2	Powder coated	---
6	Door border	2	Piece	SPCC cold rolled steel t1.5	Powder coated	---
7	Cable entry panel	1	Piece	SPCC cold rolled steel t1.5	Powder coated	---
8	Bracket	4	Piece	---	---	---
9	Support bracket	4	Piece	SPCC cold rolled steel t2.0	Powder coated	---
10	Screw	4	Piece	Steel	Color Zinc	M8*16 for mounting
11	Nut	4	Piece	Steel	Color Zinc	M8 for mounting
12	Washer	4	Piece	Steel	Color Zinc	ø8 for mounting
13	Plastic washer	4	Piece	---	---	ø8 for mounting
14	Mounting hole cover	4	Piece	---	---	Closing the hole

CB Compact Enclosures (With Optional Power Panel Version)

TOTEN Cabinets
www.toten.com.cn

Feature:

- Double-layer door structure;
- With extra power panel added inside, multilayer installation will be available, which could make good use of the space ;

Degree of protection:

- Comply with IEC60529, EN60529/10.91 and GB4208-93 standard;
- Small size enclosure with IP66 (width and height less than 400mm);
- Width and height over 400mm enclosure with IP55;

Material:

- SPCC cold rolled steel;
- Thickness: mounting panel: 2.5mm; others: 1.5mm;

Surface finish:

- Body of enclosure and doors ;
  Degreasing, phosphoric, electrophoretic dip-coated printed, static power with textured stove enamel RAL7035 ;
- Mounting panel (SPCC cold rolled steel)
  Degreasing, pickling, phosphoric, electrophoretic dip-coated printed, static powdered with flat coating RAL2000.

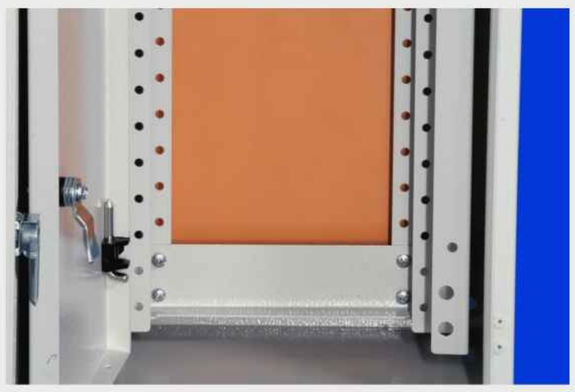

Multilayer installation structure

Inner door hinge

Main Structure

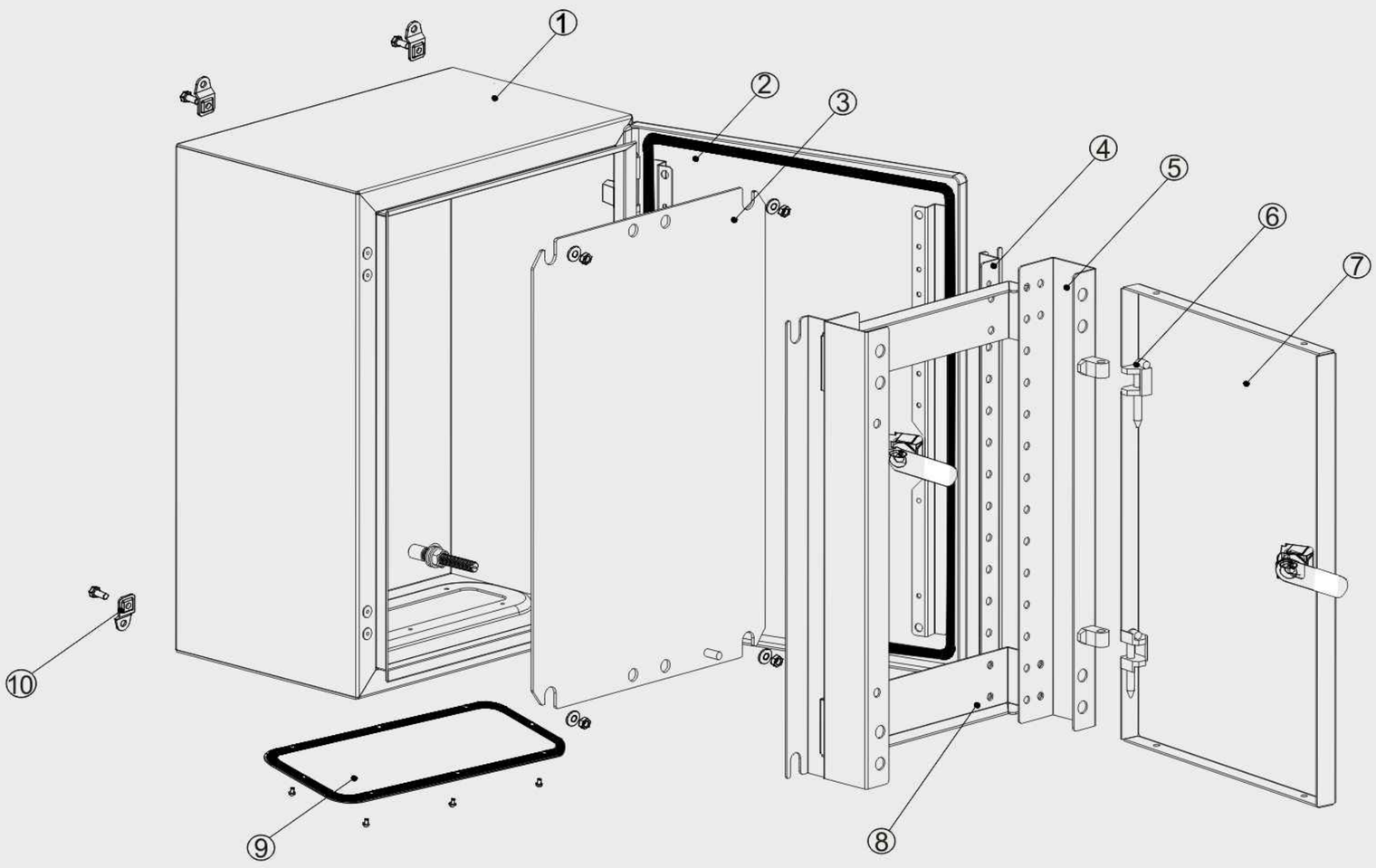

1.Body
2.Front door
3.Mounting panel
4.Pole 1
5.Pole 2
6. Hinge
7.Inner door
8.Horizontal beam
9.Mounting entrance panel
10.Braket

CB Compact Enclosures (With Optional Power Panel Version)

TOTEN Cabinets
www.toten.com.cn

Main Dimension

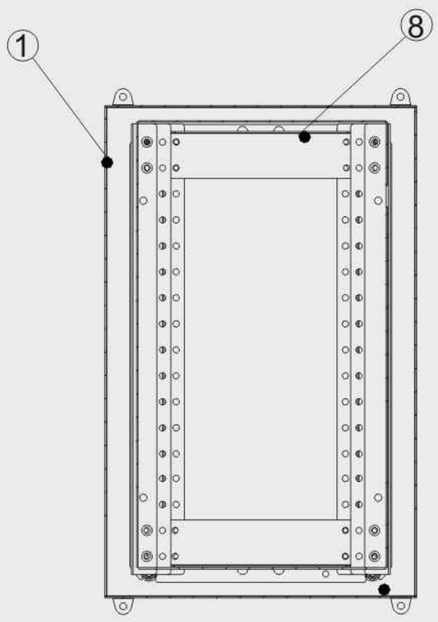

Front(without door)

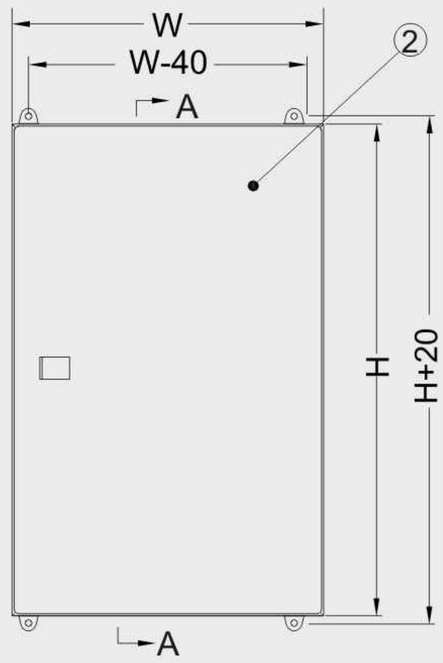

Front

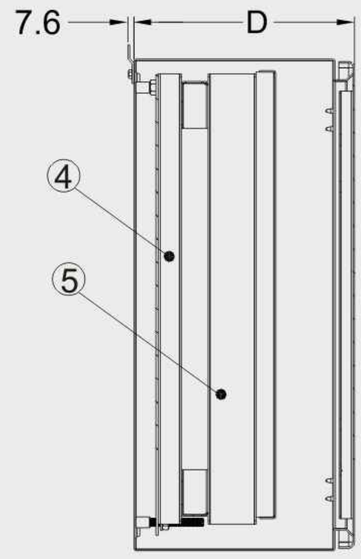

A-A

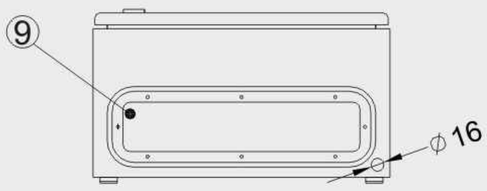

Bottom(without cover)

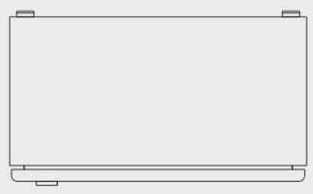

Top

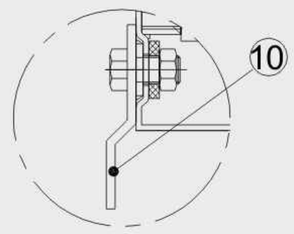

Enlarge part C

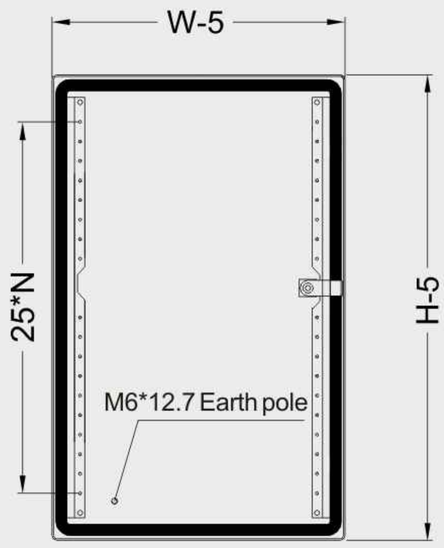

Inside of front door

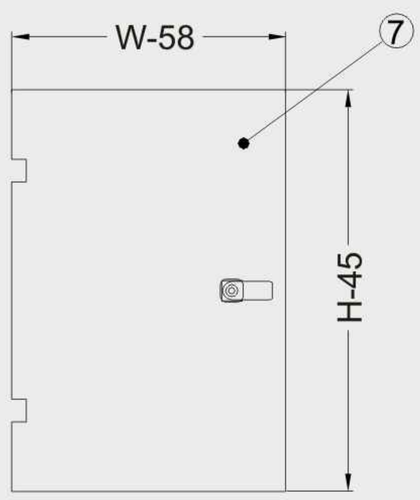

Inner door

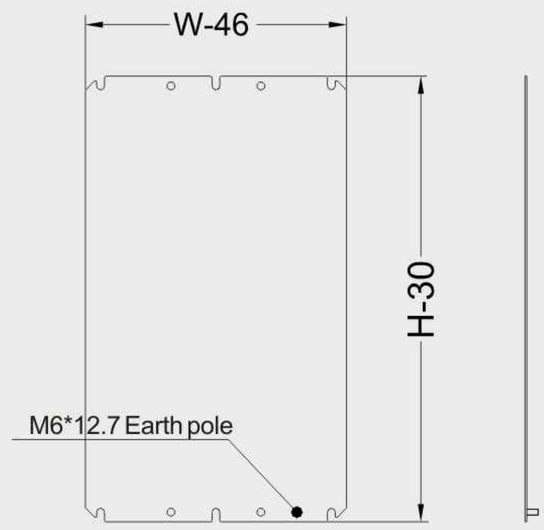

Mounting panel

Main parts:

S/N	Specification	Quantity	Unit	Material	Surface finish	Remark
1	Body	1	Piece	SPCC cold rolled steel t1.5	Powder coated	---
2	Front door	1	Piece	SPCC cold rolled steel t1.5	Powder coated	---
3	Mounting Panel	1	Piece	SPCC cold rolled steel t2.5	Powder coated	---
4	Pole 1	2	Piece	SPCC cold rolled steel t1.5	Powder coated	---
5	Pole 2	2	Piece	SPCC cold rolled steel t1.5	Powder coated	---
6	hinge	2	Piece	---	---	---
7	Inner door	1	Piece	SPCC cold rolled steel t1.5	Powder coated	---
8	Horizontal beam	2	Piece	SPCC cold rolled steel t1.5	Powder coated	---
9	Cable entry panel	1	Piece	SPCC cold rolled steel t1.5	Powder coated	---
10	Bracket	4	Piece	---	---	---
11	Screw	4	Piece	Steel	Color Zinc	M8*16 for mounting
12	Nut	4	Piece	Steel	Color Zinc	M8 for mounting
13	Washer	4	Piece	Steel	Color Zinc	ø8 for mounting
14	Plastic washer	4	Piece	---	---	ø8 for mounting
15	Mounting hole cover	4	Piece	---	---	